Z GRILLS

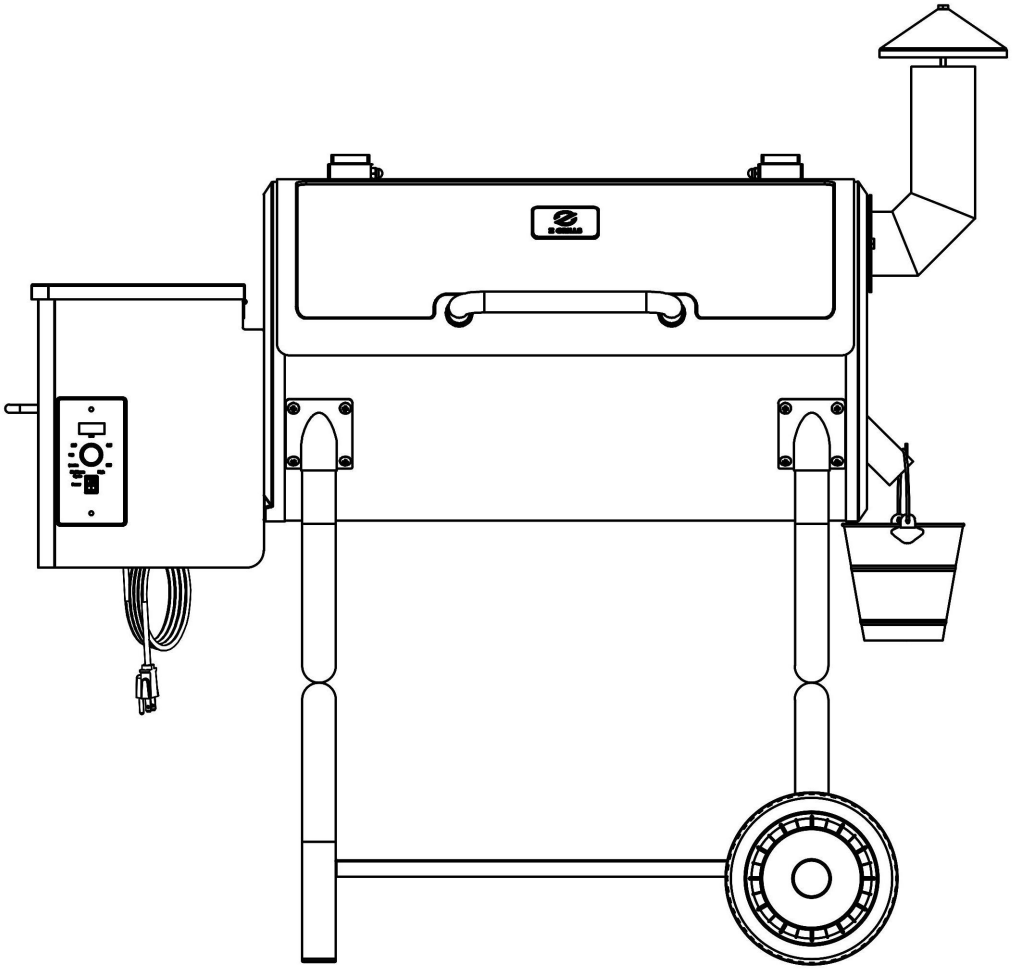

WOOD PELLET GRILLS

ZPG-550B

OWNER'S MANUAL

MON TO FRI, 8:00 A.M. - 5:00 P.M. PACIFIC STANDARD TIME
SERVICE CONTACT: 1-833-947-4557/1-833-ZGRILLS
EMAIL: support@zgrills.com
WEBSITE: www.zgrills.com

VN01012019

CONTENTS

WARNINGS 3

COMPONENT LIST 4

ASSEMBLY INSTRUCTIONS 5

INITIAL FIRING INSTRUCTIONS 10

SUBSEQUENT START-UP 11

OPERATING TIPS 12

MAINTENANCE & CLEANING 13

TROUBLESHOOTING 15

DIGTAL THERMOSTAT CONTROL WIRING DIAGRAM 17

Z GRILLS SUPPORT 18

3-Y LIMITED WARRANTY 19

SAVE THIS MANUAL FOR FUTURE REFERENCE

WARNINGS!

This grill is for outdoor use only. DO NOT use it in any enclosed area.

DO NOT store or use combustible materials or liquids near this appliance.

Keep children away while it is in use.

Maintain a safe distance between your grill and any combustible materials.

DO NOT move your grill while operating or while it is hot. Wait until the grill is completely cold.

If a grease fire occurs, turn "off" and leave lid closed until the fire is extinguished. DO NOT unplug the power cord. DO NOT throw water on it. DO NOT try to smother the fire.

Clean and maintain your grill after each use.

We suggest that you use Z GRILLS BBQ WOOD PELLETS, which are specifically made to work in our grills.

DO NOT use your grill on rainy days.

DO NOT touch any part of your grill while it is hot. Serious bodily injury could result.

We suggest the use of heat-resistant gloves when operating this grill.

We suggest that you should wrap the Grease Drain Pan with heavy-duty aluminum foil before using because it is easy to clean.

For convenient and safe assembly, use at least two people to assemble the grill.

Make sure the power cord is disconnected before performing any service or maintenance.

Always keep the Pellet Hopper dry, the wood pellets will expand greatly, break apart and even jam the feed system if the pellets get wet or are exposed to high humidity.

DO NOT place anything heavy on top of hopper lid. It is not a shelf and is a tip hazard.

COMPONENT LIST

ITEM	QTY	DESCRIPTION
1	1	Grill Chamber Assembly
2	1	Hopper Assembly
3	1	Warming Rack
4	1	Porcelain Grills
5	1	Grease Drain Pan
6	1	Heat Baffle
7	1	RTD Temperature Probe
8	1	RTD Guard
9	1	Lid Handle
10	2	Handle Guide
11	1	Lid
12	2	Hinge Assembly
13	1	Chimney Cap
14	1	Smoke Stack Assembly
15	1	Smoke Stack Gasket
16	1	Grease Bucket
17	1	Right Leg
18	2	Wheels
19	2	Axle
20	1	Bottom Plate
21	1	Left Leg
22	4	Pipe Plug
23	1	Hopper Lid
24	1	Hopper Shell

ITEM	QTY	DESCRIPTION
25	1	Digital Control
26	1	Hopper Guard
27	1	Auger Drive Motor
28	1	Auger Nylon Ring
29	1	Auger
30	1	Foam Glue
31	1	Hot Rod (Ignitor)
32	1	Feeder Assembly
33	1	Fan
34	1	Power Cord
35	1	Hopper Insulation Gasket
36	1	Fire pot Welding Assembly
37	1	Cable Clip
38	2	Wheel Cap
A	1	Screwdriver
B	2	Wrench
C	20	Bolt
D	4	Washer
E	2	Washer
F	2	Spring Washer
G	2	Cap Nut
H	4	Bolt
I	2	Hexagon Nut

ASSEMBLY INSTRUCTIONS

PARTS DIAGRAM

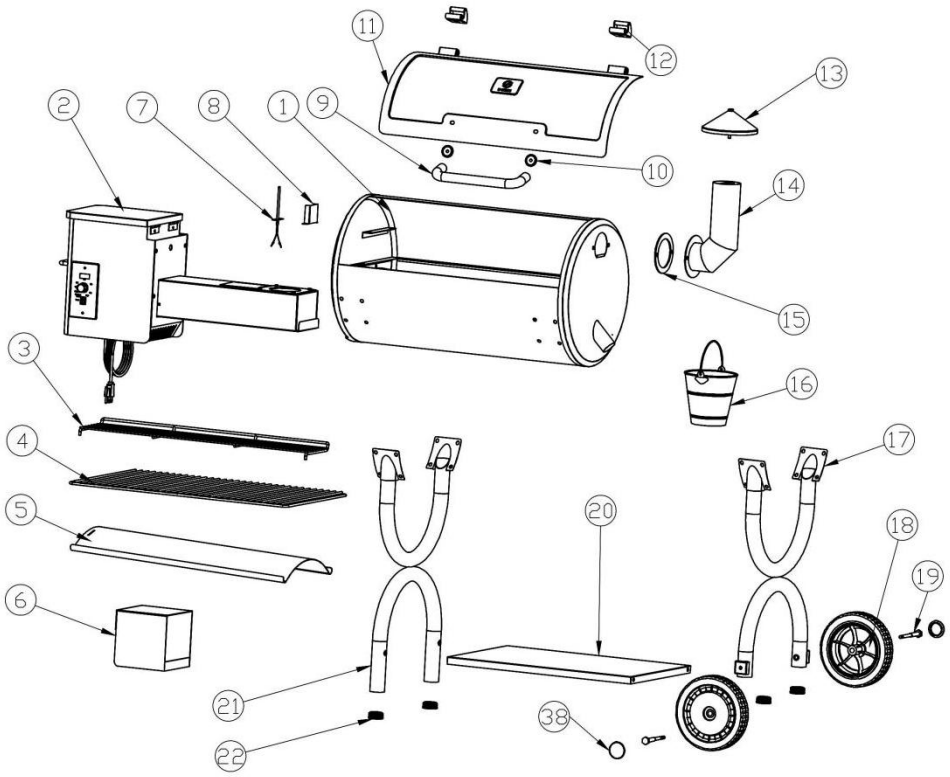

Hopper Burner Assembly：

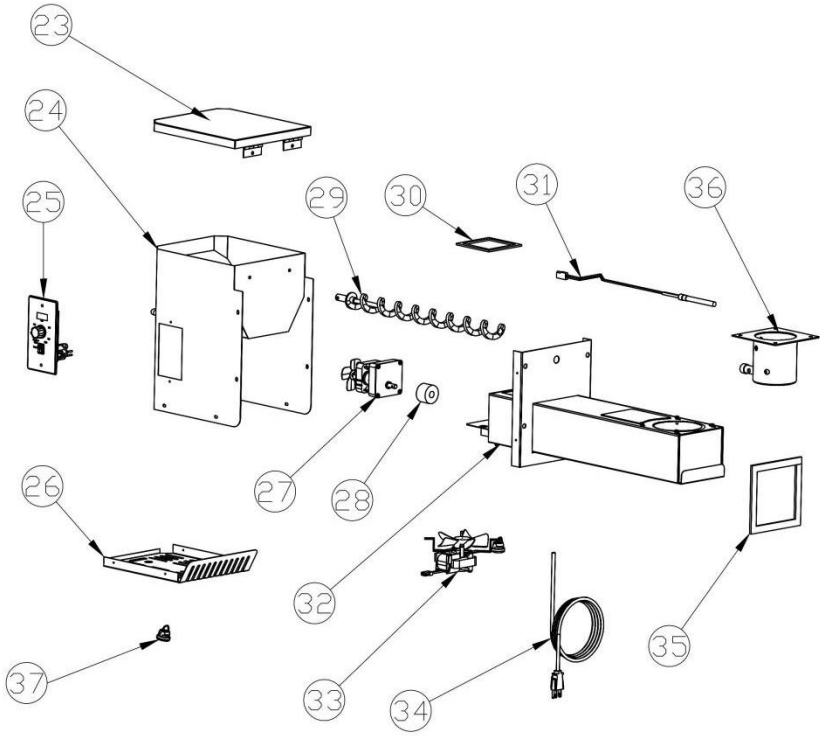

1. MOUNTING THE BODY FRAME TO THE CHAMBER

1. Unpack all the items, including the parts packed in the Grill Chamber (1). Turn the body upside down and place upon the original Styrofoam packing material from the carton. (CAUTION: Grill is heavy and requires two people to lift.)
2. Take the Right & Left Leg (17)(21) and use the Bolt (C) to assemble the grill body through theholes. The front and back are assembled in the same way. As shown.
3. Place the Bottom Plate (20) in the middle position of the two legs, attach the Bottom Plate (20) on Legs by using the Bolt (C). The four positions are installed in the same manner. As shown.

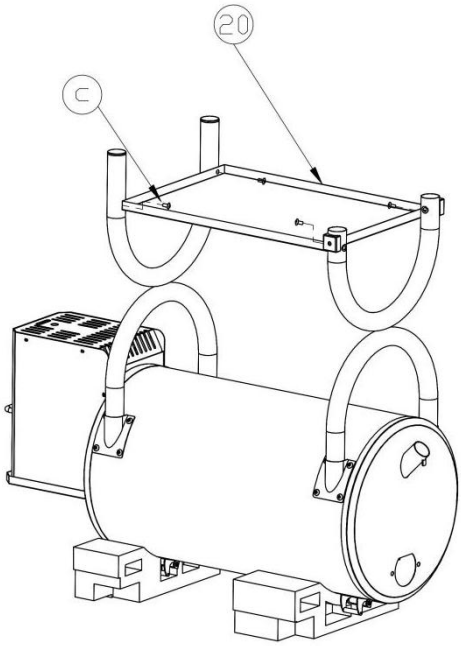

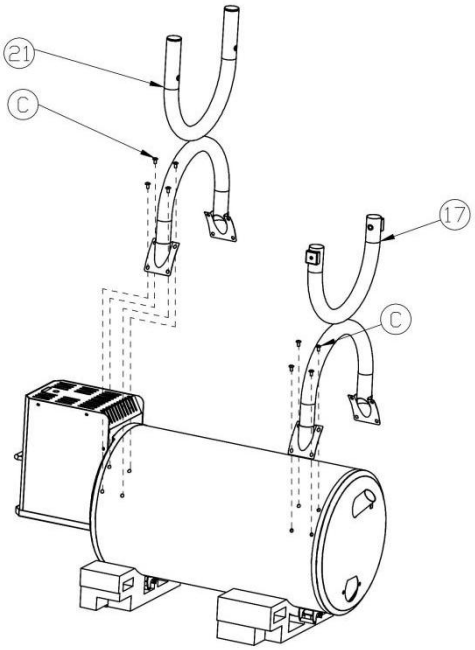

4. Push the Axle (19) through the wheel and then through the hole in the legs as shown. The Flat Washer (E), Spring Washer (F), and Cap Nut (G) are used to secure the wheel assembly in place. Repeat for the other wheel. Press the Wheel Caps (38) firmly into the outer recess on the wheels as shown.

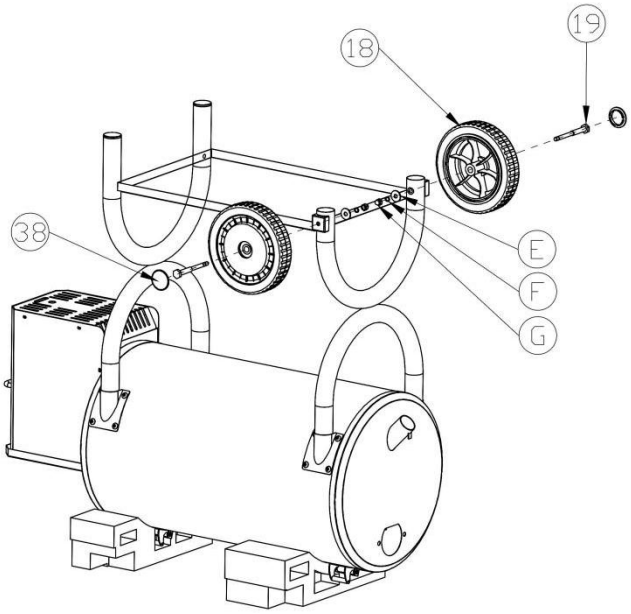

2.INSTALLING THE CHAMBER HANDLE TO THE LID:

1. Lift the Grill Assembly, turn, and place on the floor.
2. From the inside of the raised lid, push the Blots (H) through the Washers (D) and then through the lid and Handle Guide (10). Handle should sit inside the depression in the guide. Thread Bolts (H) into Handle (9) and tighten with Wrench (B).

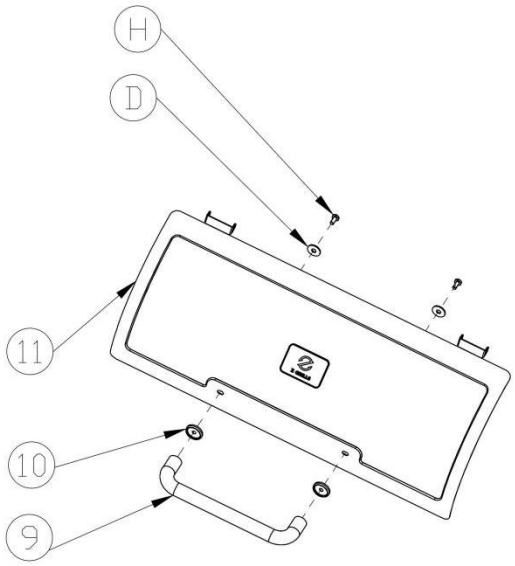

3.INSTALLING THE SMOKESTACK AND CHIMNEY CAP:

1. Use Bolt (H) through the holes of Smokestack (14) and Smoke Stack Gasket (15), align the hole of grill body, then attach the Flat Washer (D) and Hexagon Nut (I). Finally use Wrench (B) to tighten them. As shown.
2. Tighten the Chimney Cap (13) on the Smoke Stack Assembly (14). Note that the chimney is vertical and then tightened.

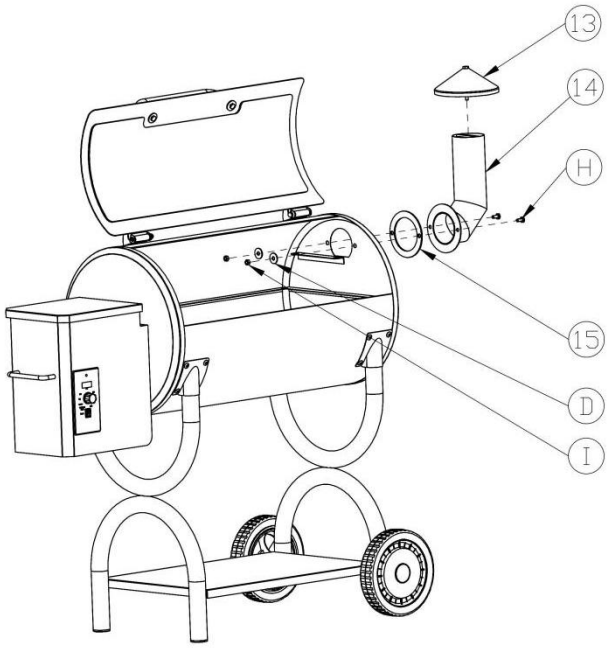

4.INSTALLING THE HEAT BAFFLE:

Place the lower bracket of the Heat Baffle (6) into the groove of the feeder.

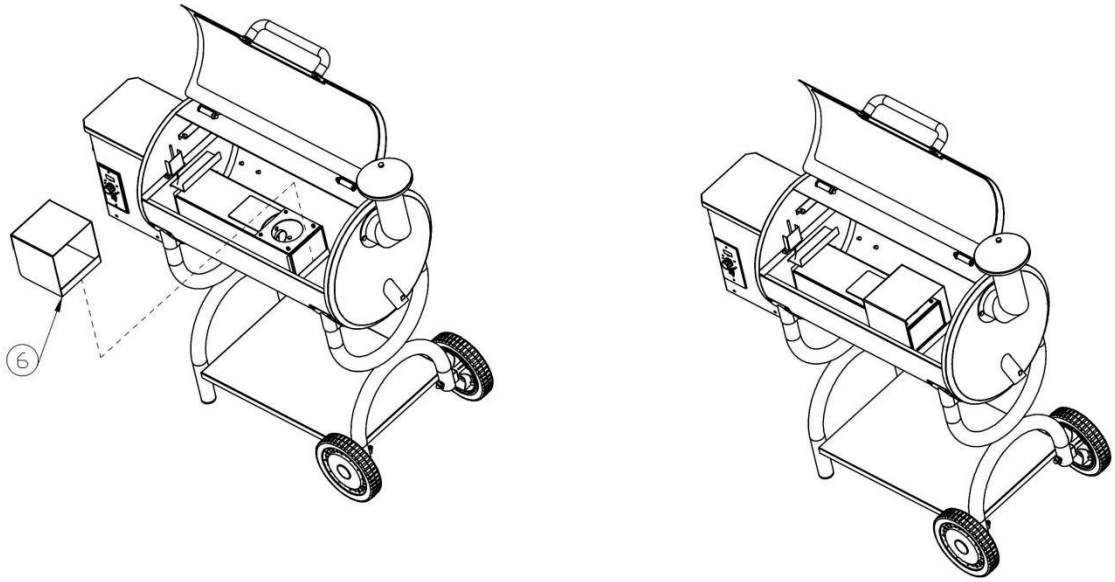

5.INSTALLING THE GREASE DRAIN PAN:

Install the Grease Drain Pan (5) over the Heat Baffle (6) facing downward to fit onto the locating brackets so that the grease can flow into the Grease Drain Tube.

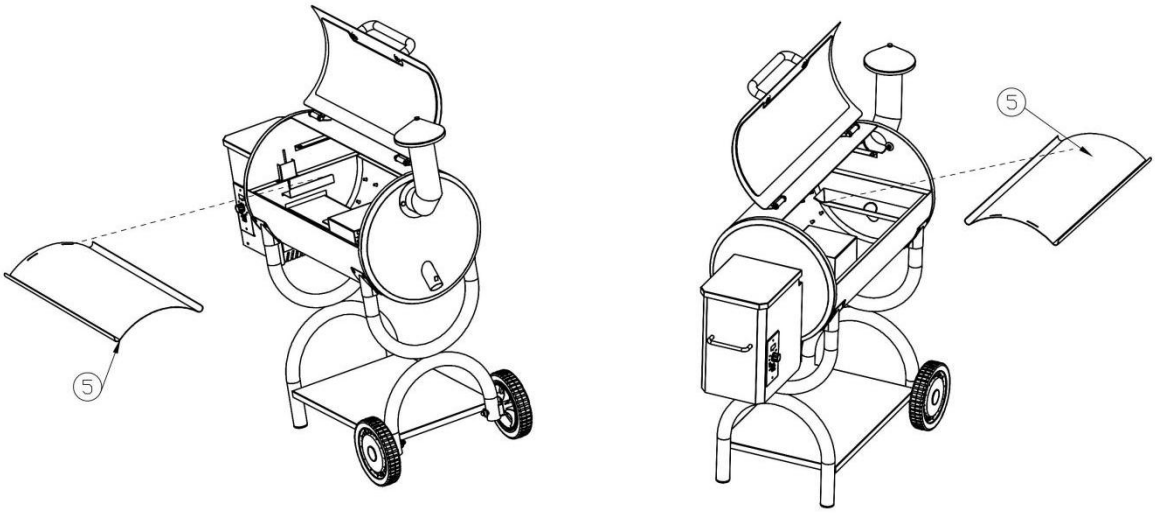

6.INSTALLING THE COOKING GRATE AND WARMING RACK:

Install the Porcelain Cooking Grate (4) and Warming Rack (3) into the Chamber.

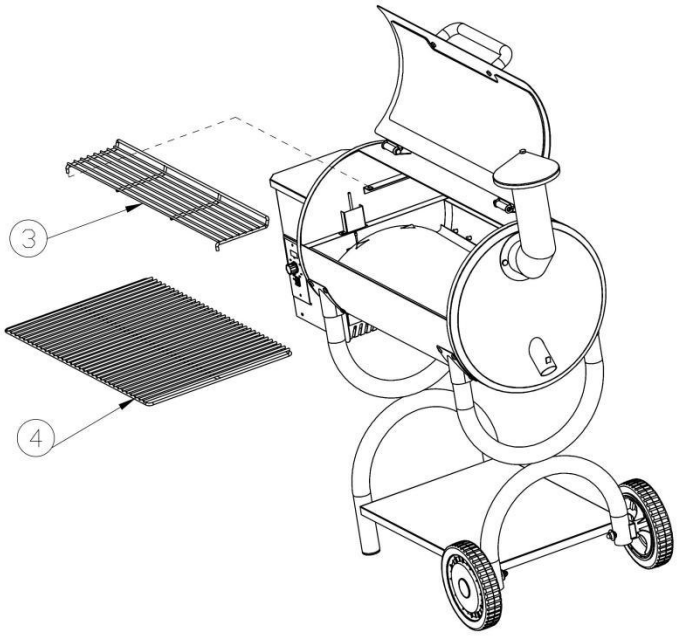

7.HANG ON THE GREASE BUCKET:

Located the Grease Drain Tube which is on the right side of the Chamber, then hang the Grease Bucket (16) on the hook.

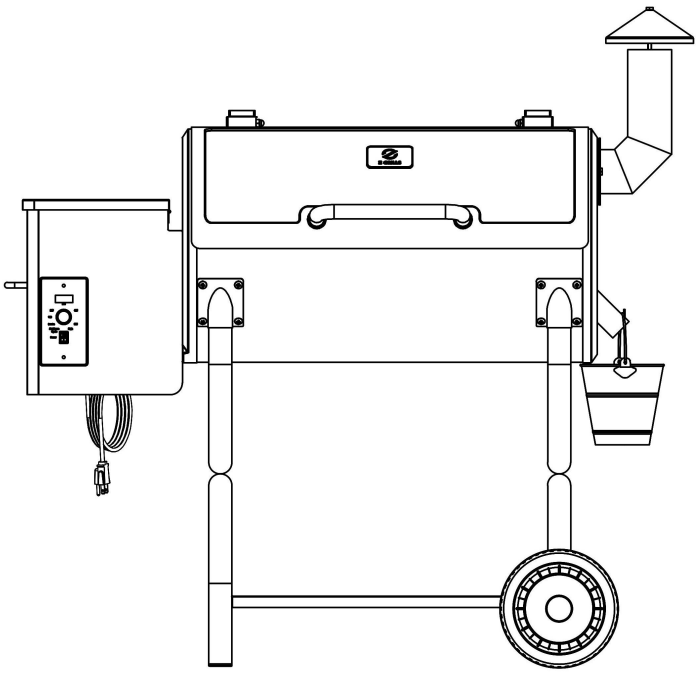

INITIAL FIRING INSTRUCTIONS

Please read this manual carefully and follow it step by step before starting your Z Grills for the first time and each time the grill runs out of pellets.

1.Remove the Porcelain Grills, Grease Drain Pan and Heat Baffle from the interior of the grill.
2.Open the Pellet Hopper Lid, make sure there are no foreign objects in the Auger and Hopper.
3.With the Switch in the OFF(O) position, plug the power cord into a 110 Volt AC grounded outlet.
4.Turn on your Z Grill and turn the Temperature Dial to the SMOKE position. Please check the following things:
(WARNING: Please do not touch it!)

- Confirm the Auger is turning.
- Hold your fingers above the Firepot to confirm the fan is blowing air through the Firepot.
- The hotrod will heat up and you should be able to sense the heat coming from it. (It takes approximately 1-2 minutes.)
- **You should see a temperature number displayed on your LED DISPLAY. If you see something different displayed it is an ERROR CODE. NOTE: PLEASE SEE TROUBLESHOOTING FOR DETAILS ON ERROR CODES.**

5.Turn the Temperature Dial to SHUT DOWN CYCLE.
(Please note the draft fan will stay on for 10 minutes in this mode.)
6.Fill the Pellet Hopper with Pellets. Then turn the Temperature Dial to HIGH. It takes some time for the Pellets to travel through the tube, when the Pellets start to drop, turn the Temperature Dial to SHUT DOWN CYCLE. Leave grill until it shuts off automatically.
7.Turn the Temperature Dial to SMOKE. Allow the Pellets to come to full flame. Once flames are coming out of the Firepot, turn the Temperature Dial to SHUT DOWN CYCLE and let the grill cool down.
[We suggest that you should wrap the Grease Drain Pan with heavy-duty aluminum foil before using because it is easy to clean.]
8.Place components back in place. Open the lid and turn the Temperature Dial to SMOKE. A few minutes later, when you see whitish-gray smoke coming out of the grill, close the lid and turn the Temperature Dial to any cooking setting desired.
9.Set Temperature Dial to HIGH and let grill run for 45 minutes at this setting to rid it of any foreign matter. This step must be done before cooking any food.
10.Please preheat the grill for 10 minutes before adding food. This makes your grill heat up faster and quickly reach your desired cooking temperature. Adding food sooner will slow down the heating process.

ALWAYS START THE GRILL ON SMOKE SETTING WITH THE LID OPEN !
After the Pellets are ignited, you can turn the Temperature Dial to any cooking temperature desired.

SUBSEQUENT START-UP

ATTENTION: If the grill fails to light or the fire in the Firepot goes out while cooking, it is vital to follow these steps when sufficient pellets are still in the Pellet Hopper. Failure to follow the steps may cause a hazardous “over-firing” of your grill due to an excess of unburned pellets in the Firepot.

1.Turn OFF the appliance and unplug the Power Cord. After the grill cools down, remove all food, the Porcelain Grills, Grease Drain Pan and the Heat Baffle.

2.Remove all unburned pellets and ash from inside and around the Firepot (See instruction for proper handling and disposal of ash).

3.Plug the Power Cord and turn on the grill. Pellets should fall into the Firepot and the Hot Rod should begin to heat (it will start to turn red).

4.If this step is successful, you will see flames come out of the Firepot.

Then turn off the grill and let it cool down. Next, put components back in place, open the lid and turn the Temperature Dial to SMOKE. Wait a few minutes until you see whitish-gray smoke coming out of the grill, then close the lid and turn the Temperature Dial to any cooking setting desired.

5.If this step is not successful, see TROUBLESHOOTING or contact Z GRILLS Technical Support to help diagnose the problem.

SHUTDOWN CYCLE

- Auger turns off
- Fan continues to run for 10 minutes

After you have finished cooking, turn the Temperature Dial to Shutdown Cycle position. The function of this setting is to leave the Draft Induction Fan running for 10 minutes to burn redundant pellets in the firepot. After the fan runs for 10 minutes, the fan will stop and the controller will power off.

CAUTION: The main power switch will shut the power off to the controller and the Temperature Dial Knob switch will cut off power to the grill components only. When servicing the controller or any parts ensure that the power supply is disconnected by unplugging the grill to avoid a shock hazard.

OPERATING TIPS

1.like all grills, the actual temperature of this grill and the cooking times will be affected by external temperature, humidity, wind conditions, quality of pellets, etc.

2.It is beneficial to shelter your grill from the wind. This will aid in temperature output, heat retention and heat recovery time when the lid is open.

3.Do not open the lid frequently, it will increase your cooking time. You can open the lid when you want the grill to cool down quickly.

4.Please preheat the grill for 10 minutes before adding food. This will allow your grill to heat up quickly and return to your desired temperature once food is added.

5.Never move your grill while in use.

6.Never put water into the Pellet Hopper or Firepot.

7.**WARNING: NEVER ADD PELLETS TO THE FIREPOT DIRECTLY. IT IS DANGEROUS.** If you run out of pellets and lose your fire while cooking, let the grill cool down and start again with the INITIAL FIRING INSTRUCTIONS.

8. We recommend you cover your Grease Drain Pan with heavy-duty aluminum foil and change it frequently. This is the simplest way to maintain your Grease Drain Pan. Failure to clean the Grease Drain Pan, V-shaped Grease Drain and Grease Drain Tube may cause grease fires. If this situation happens, turn the Switch OFF(O) to reduce the amount of oxygen in the Chamber and keep the lid open until the fire is completely out. AT THE SAME TIME, BE CAREFUL NOT TO BURN YOURSELF. When the grill is completely cool, clean any grease accumulation from the V-shaped Grease Drain and the Grease Drain Pan. Replace the foil on the Grease Drain Pan. Then restart the grill and resume cooking.

MAINTENANCE & CLEANING

Your Z GRILL requires regular maintenance.

Make sure your grill is OFF, unplugged and completely cold before performing any maintenance and cleaning.

Grease

1.With regular use your grill will accumulate grease on the Flue Lining, the Grease Drain Tube, the V-shaped Grease Drain and the Grease Drain Pan. Always be sure these areas are clean and free of grease and debris. You should check and clean these areas regularly to reduce the risk of fire.

2.It is easier to remove accumulated grease when the grill is still warm (not hot).

BE CAREFUL NOT TO BURN YOURSELF. Heat-resistant gloves are recommended.

If too much grease is allowed to build up in the V-shaped Grease Drain or is allowed to plug the Grease Drain Tube, a grease fire could result. It is necessary to clean these area regularly. You can scarp the grease accumulation from inside the V-shaped Grease Drain and Grease Drain Tube by using a stiff, nonmetallic tool. Much of the loosened grease can be pushed down through the Grease Drain Tube and fall into the Grease Bucket. Wipe up remaining grease residue with paper towels or disposable rags.

Flue Pipe(Smoke Stack)

Remove the Chimney Cap Assembly, clean it with warm soapy water. Scrape the creosote and grease accumulation from inside of the vertical and horizontal sections of the Flue Pipe by using a stiff, nonmetallic tool such as a wooden paint stir stick. Once the creosote and grease residue has been loosened from the Flue Pipe Lining, much of it can be cleaned with paper towels or disposable rags. Do not spray water or other liquid cleaners onto the inside of the grill.

Outside surfaces

1.Use warm soapy water to wipe away grease. Do not use oven cleaner, abrasive cleansers or abrasive cleaning pads on the outside grill surfaces.

2.It is highly recommended that you use Z GRILLS Cover to protect your grill .

3.You can use a high-quality car wax on the outside surfaces of your grill to protect it’s finish.

Internal component

1.To clean the Porcelain-coated Grill Grates we recommend using a long-handled cleaning brush designed for Porcelain-coated Grates.

2.It is recommended that you clean your Grill Grates after each use.

3.Clean the inner RTD temperature probe after each use.

Ash

Clean the ash from the interior of the grill periodically. If excessive ash is in the firepot, it may cause the fire to go out. This is especially true in the SMOKE setting. A shop vac is an excellent tool to use for removing the ash. **WARNING: MAKE SURE THE GRILL FIRE IS OUT, THE UNIT IS OFF, UNPLUGGED AND COLD BEFORE ATTEMPTING TO CLEAN ASH FROM THE GRILL.**

TROUBLESHOOTING

CAUTION: Make sure the grill is completely cool and unplugged before you do any inspection, cleaning, maintenance or service work.

Problem	Potential Cause	Solution
Grill does not work properly	Power	Make sure the power cord is plugged in. Verify there is power at the electrical outlet.
	Fuse	Remove the digital control, check the fuse on the back. Replace the fuse if blown.
	Hot Rod	If both of the Draft Inducer Fan and the Auger Driver Motor are operating, the Hot Rod needs to be replaced. If one or both are not operating, please contact customer support.
	Wires & Connections	Check the wires and connectors to make sure they are fastened securely and not damaged. Contact customer support if you need help.
	Auger Drive Motor	Locate the small fan motor blade on the back of the auger drive motor. Turn unit on. If the fan does not turn on then the Auger Drive Motor needs to be replaced.
Fire goes out	Too much ash	Clean the ash. Refer to MAINTENANCE & CLEANING.
How to start	SMOKE setting	Start your grill on the SMOKE setting with the lid open. After 2 minutes, close the lid and turn to any temperature setting desired.

Unexpected grill temperature is displayed	External Factor	Grill temperature is influenced by environmental factors such as high temperature, wind and direct sun. Place unit in shaded area. Open the lid to reduce inside temperature.
Excess or discolored smoke	Pellets	Replace moist pellets with fresh dry pellets.
Get your new parts	Contact Z GRILLS Customer Service or your Z GRILLS dealer to place an order	When contacting customer support please have the following information available: Your authorized Z Grills dealer, your name, phone number, address, your Z Grill serial number and part identification number. Your part number is listed on the COMPONENT LIST.

ERROR CODES

LEr (Low Temperature Alarm)

- Grill temperature was below 150℉ for more than 20 minutes.

HEr (High Temperature Alarm)

- Grill temperature reached 550℉.

Er 1

- Ensure temperature probe is properly connected to the controller board.

Er 2

- Temperature probe short circuit.

If this error occurs at initial start up, turn grill off, turn dial to Power Shut Down and then back to Smoke. Turn grill back on to begin lighting process. Whenever either of these alarm conditions occurs you should check to see
what caused this condition and fix the problem.

WARNING: DO NOT TURN OFF THE SWITCH WHILE THE FAN IS STILL WORKING ON THE SHUT DOWN CYCLE, THE GRILL WILL AUTOMATICALLY SHUT OFF WHEN THE CYCLE IS DONE. INTERRUPTION OF THE SHUT DOWN CYCLE COULD RESULT IN A FIRE IN THE HOPPER CHAMBER.

DIGTAL THERMOSTAT CONTROL WIRING DIAGRAM

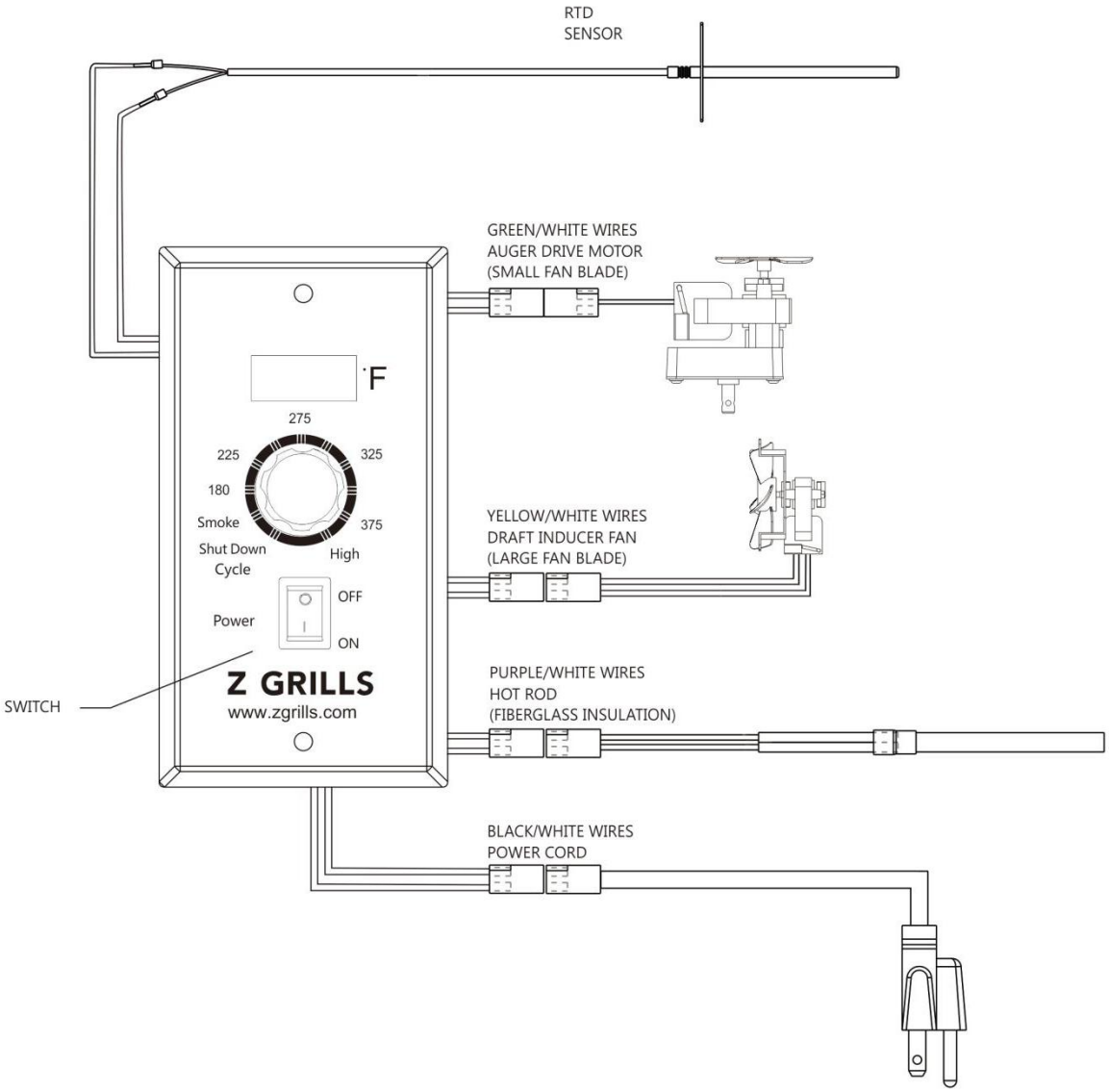

Z GRILLS SUPPORT

Thank you for purchasing a Z GRILL!
If you have any question, please contact customer support or your Z GRILL dealer.
Z GRILLS, INC. offers the best technical and sales support in the industry.
When calling customer please be prepared to provide the following information:

1.Dealer's name and date of purchase
2.Purchaser's name, phone number and address
3.Z GRILLS model number, serial number and part identification numbers
4.Please be prepared to describe your problem accurately so we can help you resolve your issue
5.Providing pictures or videos is beneficial

Z GRILLS CUSTOMER SERVICE

MON TO FRI, 8:00 A.M. - 5:00 P.M. PACIFIC STANDARD TIME

SERVICE CONTACT: 1-833-947-4557/1-833-ZGRILLS

EMAIL: support@zgrills.com

WEBSITE: www.zgrills.com

Z GRILLS
3 YEAR LIMITED WARRANTY

Z GRILLS, Inc. provides a 3 years warranty from the date of purchase by the original owner. This warranty applies to defects in all materials and workmanship. During the warranty period, Z GRILLS, Inc. will at its option repair or replace defective parts or units.

This limited warranty does not apply to paint, firepot, grill cover or damage caused from corrosion. Z Grills shall not be liable for transportation charges, labor costs or export duties.

Z GRILLS, Inc. takes every precaution to utilize materials that retard rust including the use of high-temperature paint where advisable. Even with these safeguards, the protective coating can be compromised by various substances and conditions beyond Z Grills' control. Humid environment, high temperature, chlorine, insecticide, salt and disinfectant are some of the substances that can affect paint and metal coatings. For these reasons, the limited warranties do not cover rust or oxidization, unless there is loss of structural integrity on the grill components.

Z GRILLS, Inc. shall not be liable if you install, operate, clean or maintain your grill without following the owners' manual instructions. Misuse, abuse, alteration and natural disasters are not included in this warranty.